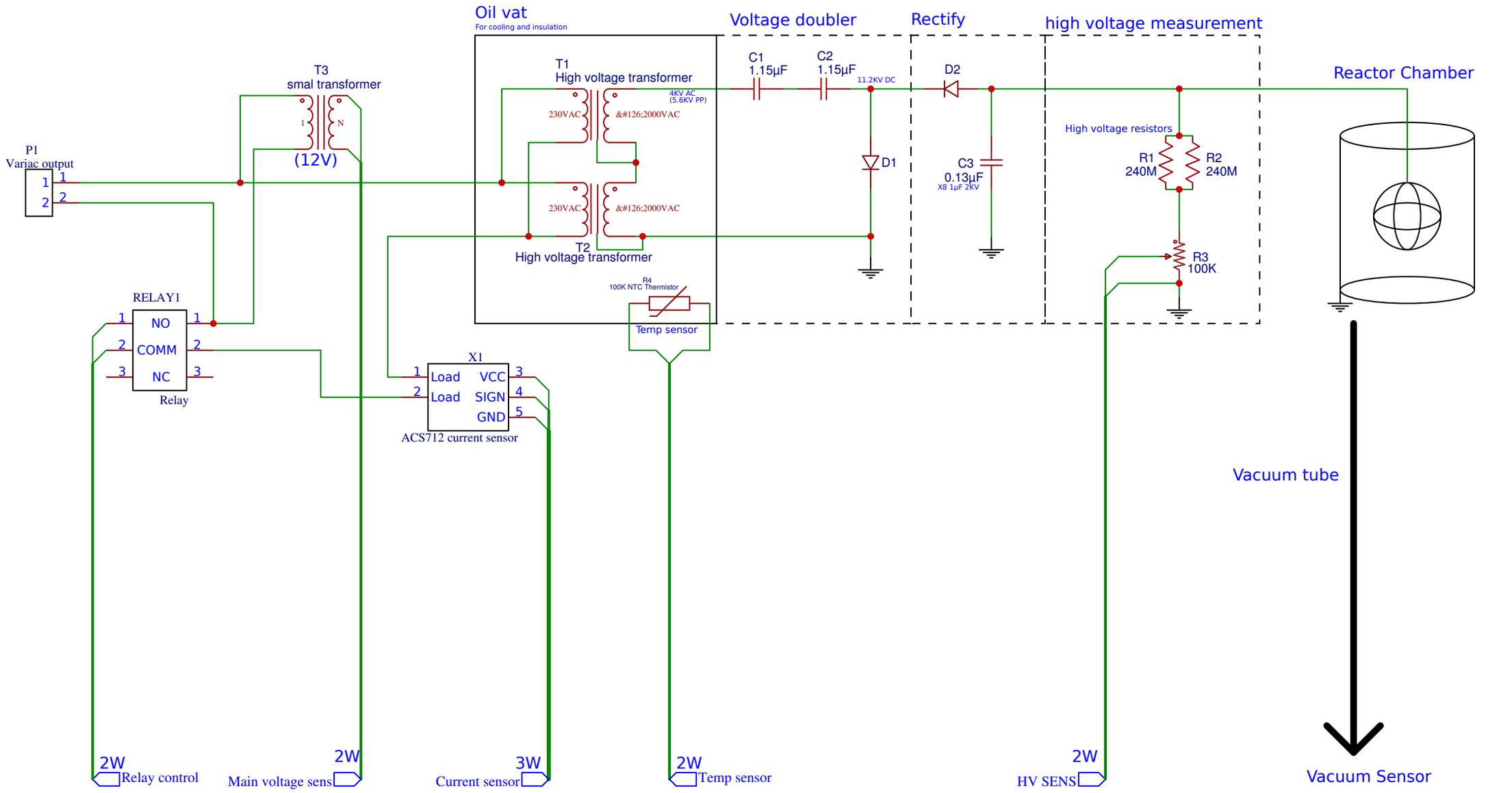

TITLE: GIP	REV: 1.2
Date: 2018-07-21	Sheet: 1/1
EasyEDA V5.6.10	Drawn By: Robin Peeten