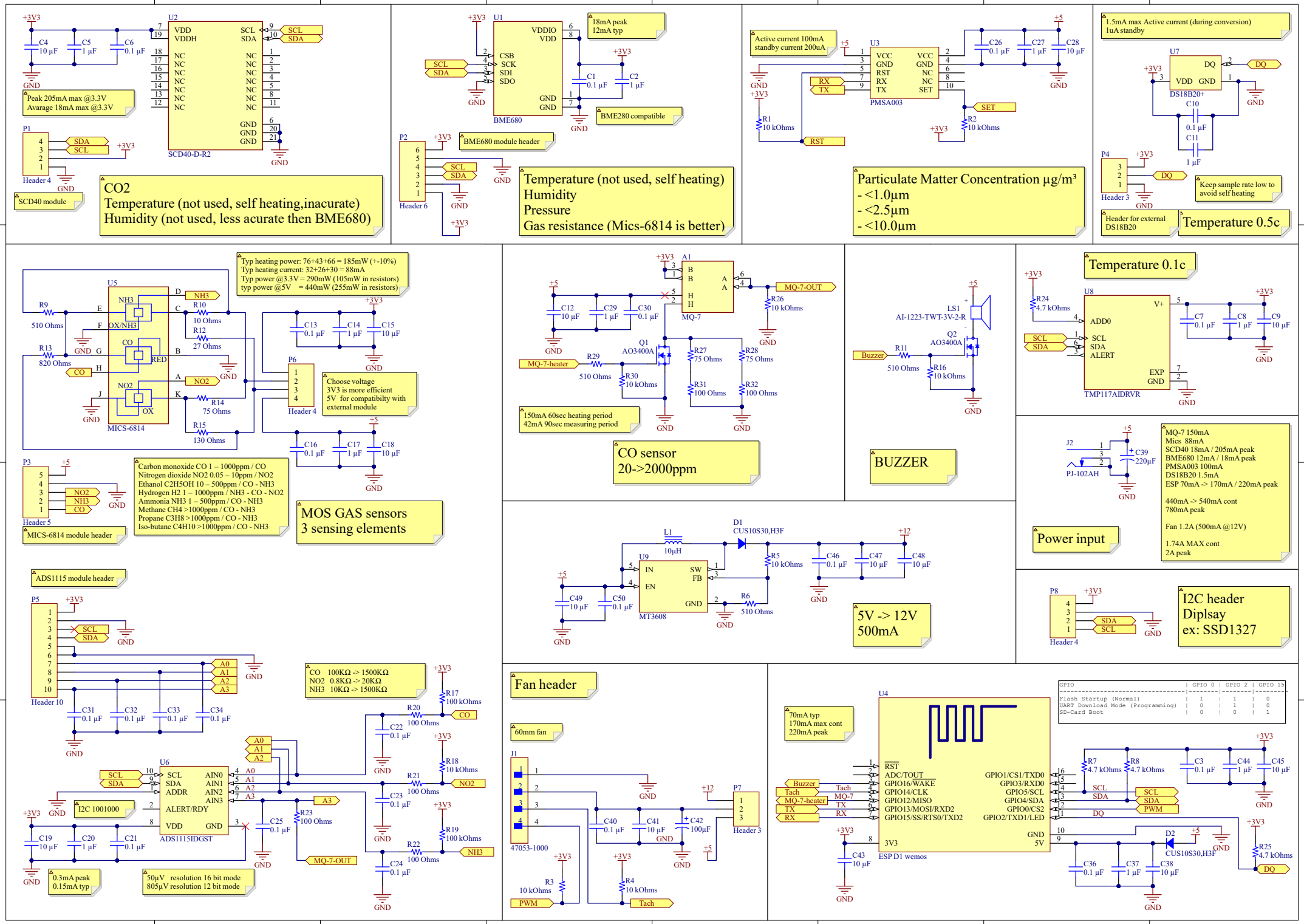
U2
VDD
VDDH
SCL
SDA
NC
GND
SCD40-D-R2
C4 10 µF
C5 1 µF
C6 0.1 µF
+3V3
GND
Peak 205mA max @3.3V
Avarage 18mA max @3.3V
P1
Header 4
SCD40 module
CO2
Temperature (not used, self heating,inacurate)
Humidity (not used, less acurate then BME680)
U1
VDDIO
VDD
CSB
SCK
SDI
SDO
BME680
18mA peak
12mA typ
C1 0.1 µF
C2 1 µF
BME280 compatible
P2
Header 6
BME680 module header
Temperature (not used, self heating)
Humidity
Pressure
Gas resistance (Mics-6814 is better)
Active current 100mA
standby current 200uA
U3
VCC
GND
RST
RX
TX
SET
PMSA003
C26 0.1 µF
C27 1 µF
C28 10 µF
R1 10 kOhms
R2 10 kOhms
Particulate Matter Concentration µg/m³
- <1.0µm
- <2.5µm
- <10.0µm
1.5mA max Active current (during conversion)
1uA standby
U7
DQ
VDD
DS18B20+
C10 0.1 µF
C11 1 µF
P4
Header 3
Keep sample rate low to avoid self heating
Header for external DS18B20
Temperature 0.5c
U5
NH3
OX/NH3
CO
RED
NO2
OX
MICS-6814
R9 510 Ohms
R13 820 Ohms
R10 10 Ohms
R12 27 Ohms
R14 75 Ohms
R15 130 Ohms
Typ heating power: 76+43+66 = 185mW (+-10%)
Typ heating current: 32+26+30 = 88mA
Typ power @3.3V = 290mW (105mW in resistors)
typ power @5V = 440mW (255mW in resistors)
C13 0.1 µF
C14 1 µF
C15 10 µF
P6
Header 4
Choose voltage
3V3 is more efficient
5V for compatibilty with external module
C16 0.1 µF
C17 1 µF
C18 10 µF
P3
Header 5
MICS-6814 module header
Carbon monoxide CO 1 – 1000ppm / CO
Nitrogen dioxide NO2 0.05 – 10ppm / NO2
Ethanol C2H5OH 10 – 500ppm / CO - NH3
Hydrogen H2 1 – 1000ppm / NH3 - CO - NO2
Ammonia NH3 1 – 500ppm / CO - NH3
Methane CH4 >1000ppm / CO - NH3
Propane C3H8 >1000ppm / CO - NH3
Iso-butane C4H10 >1000ppm / CO - NH3
MOS GAS sensors
3 sensing elements
A1
MQ-7
MQ-7-OUT
R26 10 kOhms
C12 10 µF
C29 1 µF
C30 0.1 µF
Q1 AO3400A
MQ-7-heater
R29 510 Ohms
R30 10 kOhms
R27 75 Ohms
R28 75 Ohms
R31 100 Ohms
R32 100 Ohms
150mA 60sec heating period
42mA 90sec measuring period
CO sensor
20->2000ppm
LS1
AI-1223-TWT-3V-2-R
Q2 AO3400A
Buzzer
R11 510 Ohms
R16 10 kOhms
BUZZER
Temperature 0.1c
U8
V+
ADD0
SCL
SDA
ALERT
EXP
GND
TMP117AIDRVR
R24 4.7 kOhms
C7 0.1 µF
C8 1 µF
C9 10 µF
J2
PJ-102AH
C39 220µF
MQ-7 150mA
Mics 88mA
SCD40 18mA / 205mA peak
BME680 12mA / 18mA peak
PMSA003 100mA
DS18B20 1.5mA
ESP 70mA -> 170mA / 220mA peak
440mA -> 540mA cont
780mA peak
Fan 1.2A (500mA @12V)
1.74A MAX cont
2A peak
Power input
L1 10µH
D1 CUS10S30,H3F
U9
IN
EN
SW
FB
MT3608
C49 10 µF
C50 0.1 µF
R5 10 kOhms
R6 510 Ohms
C46 0.1 µF
C47 10 µF
C48 10 µF
5V -> 12V
500mA
P8
Header 4
I2C header
Diplsay
ex: SSD1327
ADS1115 module header
P5
Header 10
C31 0.1 µF
C32 0.1 µF
C33 0.1 µF
C34 0.1 µF
CO 100KΩ -> 1500KΩ
NO2 0.8KΩ -> 20KΩ
NH3 10KΩ -> 1500KΩ
U6
AIN0
AIN1
AIN2
AIN3
ADDR
ALERT/RDY
ADS1115IDGST
I2C 1001000
R17 100 kOhms
R18 10 kOhms
R19 100 kOhms
R20 100 Ohms
R21 100 Ohms
R22 100 Ohms
R23 100 Ohms
C22 0.1 µF
C23 0.1 µF
C24 0.1 µF
C25 0.1 µF
C19 10 µF
C20 1 µF
C21 0.1 µF
0.3mA peak
0.15mA typ
50µV resolution 16 bit mode
805µV resolution 12 bit mode
Fan header
60mm fan
J1
47053-1000
C40 0.1 µF
C41 10 µF
C42 100µF
P7
Header 3
R3 10 kOhms
R4 10 kOhms
PWM
Tach
70mA typ
170mA max cont
220mA peak
U4
RST
ADC/TOUT
GPIO16/WAKE
GPIO14/CLK
GPIO12/MISO
GPIO13/MOSI/RXD2
GPIO15/SS/RTS0/TXD2
GPIO1/CS1/TXD0
GPIO3/RXD0
GPIO5/SCL
GPIO4/SDA
GPIO0/CS2
GPIO2/TXD1/LED
3V3
GND
5V
ESP D1 wemos
GPIO | GPIO 0 | GPIO 2 | GPIO 15
Flash Startup (Normal) | 1 | 1 | 0
UART Download Mode (Programming) | 0 | 1 | 0
SD-Card Boot | 0 | 0 | 1
R7 4.7 kOhms
R8 4.7 kOhms
C3 0.1 µF
C44 1 µF
C45 10 µF
D2 CUS10S30,H3F
C36 0.1 µF
C37 1 µF
C38 10 µF
R25 4.7 kOhms
C43 10 µF